MISFIT DISLOCATIONS IN CRYSTALLINE INTERFACES

M. A. FORTES

Departamento de Metalurgia, Instituto Superior Técnico
Centro de Mecânica e Materiais da Universidade Técnica de Lisboa
Av. Rovisco Pais, Ed I. S. T. — 1096 Lisboa Codex, Portugal

(Received 13 April 1984)

ABSTRACT — The equations that give the misfit dislocation content of an arbitrary interface are derived from a general formulation of the coincidence site lattice model of crystalline interfaces. The equations are solved, by introducing a "dislocation content lattice", to determine the orientation and spacing of the dislocations. The results are amenable to a simple geometrical interpretation. Grain boundaries are discussed as an application.

1 — INTRODUCTION

Arrays of misfit dislocations [1, 2] appear in grain boundaries between crystals with relative orientations deviating slightly from a coincidence site lattice (c. s. l.) orientation. At such special orientations the lattices in the two crystals admit a sub-lattice of coincidence points. The dislocations are grouped in one or more families of approximately straight, parallel and equidistant dislocations. Misfit dislocations have been observed by various techniques, particularly by transmission electron microscopy, in low [3] and high angle [4-6] grain boundaries, mainly in cubic metals. In the case of low angle boundaries, the near c. s. l. orientation is the perfect crystal. Bollmann [2] distinguishes between primary and secondary dislocations; the former occur in low angle boundaries and the latter in (other) near c. s. l. boundaries. This distinction will not be made here.

At the exact c. s. l. orientations, particularly when the degree of coincidence Σ is low (high coincidence; Σ is defined as the

reciprocal fraction of coincidence points) boundaries exist which are built up of low energy atom groups ("structural units") periodically repeated along the boundary [7, 8]. The corresponding short period boundaries have therefore a low energy and other special properties. The misfit dislocations introduced as a result of small deviations from those special or "favoured" orientations permit that in most of the boundary area the low energy atom groups are maintained [9]. Misfit dislocations can be regarded as lattice defects in the so-called DSC lattice; this is defined as the coarsest lattice that contains both crystal lattices (in a c. s. l. orientation) as sub-lattices [2]. The Burgers vectors of the (perfect) misfit dislocations are therefore among the DSC lattice vectors.

These ideas are inspired by the model of Read and Shockley [10] for low angle boundaries. In this case, the special, reference orientation is the perfect crystal and the misfit dislocations have Burgers vectors which are lattice vectors. The dislocation content of small angle boundaries, that is, the direction and spacing of the dislocations in each family, can be obtained from the well-known Frank's formula [10, 11] for a given set of three independent Burgers vectors. This formula is easily generalized to determine the dislocation content of any grain boundary between two crystals which deviate slightly from a c. s. l. orientation [5, 12, 13]. When the dislocation content is known, the contribution of the misfit dislocations to the boundary energy can be evaluated , and this may be sufficient to determine the variation of energy with the deviation away from a given c. s. l. orientation [14].

Dislocations with the same role of maintaining as much as possible low energy atomic configurations at the interface, may also occur at an interface between two different crystals [2, 15-21]. The basic ideas of the c. s. l. model can be adapted to such general interfaces, the only difficulty being that c. s. l. orientations between two different crystals (and in fact also between two non-cubic identical crystals) only occur if the lattice parameters satisfy particular metric relations [22]. Formally, a c. s. l. model of interfaces can then be based on the following points:

1 — Low energy interfaces should occur for particular values of the lattice parameters and of the parameters defining

the relative orientation of the two crystals, which correspond to a c. s. l. relation between the two crystal lattices.

2 — When the lattice parameters and/or the relative orientation deviate from the exact c. s. l. values, interfacial misfit dislocations are incorporated in the interface structure.

3 — The Burgers vectors of the interfacial dislocations are among the vectors of the DSC lattice associated with the reference c. s. l..

In this paper we derive, from the point of view of the c. s. l. model, the equations that give the dislocation content of a general interface between two crystals. To do this it is of course necessary to choose a definite reference c. s. l. relation between the two crystals or between two other crystals with different lattice parameters. The choice of the reference state is not unique and in the derivation we shall not require that the actual parameters (lattice and orientation) deviate slightly from those of the reference state. However, if the deviation is too large, the spacing between the dislocations will be so small to question their individuality. The equation derived for the total dislocation content is formally identical to the one first obtained by Bullough and Bilby [23] for a continuous distribution of surface dislocations and subsequently adapted for discrete dislocations at crystalline interfaces [20]. The advantage of the present derivation is that it clearly indicates the possible Burgers vectors of the misfit dislocations. The equation will be solved to obtain the orientation and spacing of the dislocations in a general interface. The solution is analogous to the one found by Knowles [21] but corrects an error introduced in his derivation. The dislocation distribution is related to a "dislocation content lattice" which in turn can be related to the c. s. l. of the reciprocal lattices of the two crystals. The range of applicability of the c. s. l. model of interfaces is assessed and the continuity of dislocation lines in non-planar interfaces is proved. The particular case of grain boundaries is treated as an example of application.

2 — DISTRIBUTION OF MISFIT DISLOCATIONS

2.1 – *Basic Mathematical Concepts*

We consider two crystal lattices, L and L′, and choose vector bases $(\mathbf{e}) \equiv (\mathbf{e}_1, \mathbf{e}_2, \mathbf{e}_3)$ and $(\mathbf{e}') \equiv (\mathbf{e}'_1, \mathbf{e}'_2, \mathbf{e}'_3)$ in each. When two crystals with those lattices meet at an interface, there is a definite relation between the two sets of vectors, which we write in matrix notation as

$$[\mathbf{e}] = [\mathbf{e}'] \, \mathrm{X} \tag{1}$$

where $[\mathbf{e}] = [\mathbf{e}_1, \mathbf{e}_2, \mathbf{e}_3]$ and $[\mathbf{e}'] = [\mathbf{e}'_1, \mathbf{e}'_2, \mathbf{e}'_3]$ are to be regarded as row matrices, and X is a non-singular 3×3 matrix. X defines the relative orientation of the two lattices and will be termed the orientation matrix. The relation defined by eq. (1) can be regarded in two ways. First, it defines a coincidence of vectors $\mathbf{v}$ and $\mathbf{v}'$, one in each lattice:

$$\mathbf{v}' = \mathrm{X} \, \mathbf{v} \tag{2}$$

that is, a relation between the components of $\mathbf{v}$ in the basis $(\mathbf{e})$ and those of the coincident vector $\mathbf{v}'$ in the basis $(\mathbf{e}')$. If $\{\mathbf{v}\}_{\mathbf{e}}$ is a column matrix with the $\mathbf{e}$ components of $\mathbf{v}$ then eq. (2) is equivalent to

$$\{\mathbf{v}\}_{\mathbf{e}} = \mathrm{X}^{-1} \{\mathbf{v}'\}_{\mathbf{e}'} \quad . \tag{3}$$

The second interpretation of eq. (1) is that it transforms a vector $\mathbf{v}$ of lattice L into another vector $\mathbf{v}_{\mathrm{x}}$, the $(\mathbf{e})$ components $\{\mathbf{v}\}$ and $\{\mathbf{v}_{\mathrm{x}}\}$ of the vectors being related by

$$\mathbf{v}_{\mathrm{x}} = \mathrm{X}^{-1} \mathbf{v} \quad , \quad \{\mathbf{v}_{\mathrm{x}}\}_{\mathbf{e}} = \mathrm{X}^{-1} \{\mathbf{v}\}_{\mathbf{e}} \quad . \tag{4}$$

It has been established [24] that a c. s. l. relation between the two lattices (that is, the existence of coincident vectors forming a 3-dimensional lattice) is defined by those matrices $\mathrm{X} = \mathrm{C}$ that are rational. As shown elsewhere [25] the c. s. l. can be determined by factorizing C in the form

$$\mathrm{C} = \mathrm{N}' \, \mathrm{N}^{-1} \tag{5}$$

where N and N′ are integral matrices with the least possible values of $|\det N|$ and $|\det N'|$. These values are the degrees of coincidence Σ and Σ' for lattices L and L′. A basis of the c. s. l. is

$$[\mathbf{e}]\, N = [\mathbf{e}']\, N' \quad . \tag{6}$$

The DSC lattice is determined by factorizing C in the form

$$C = M'^{-1}\, M \tag{7}$$

with the least possible values of $|\det M|$ and $|\det M'|$, which in fact coincide with Σ and Σ' [25]. A basis of the DSC is the set $(\mathbf{b}_0) = (\mathbf{b}_{01}, \mathbf{b}_{02}, \mathbf{b}_{03})$ defined by

$$[\mathbf{b}_0] = [\mathbf{e}]\, M^{-1} = [\mathbf{e}']\, M'^{-1} \quad . \tag{8}$$

In the following, we shall make use of the metric matrix of a lattice. For example, for lattice L this matrix is $G = (g_{ij})$, with $g_{ij} = \mathbf{e}_i \cdot \mathbf{e}_j$. The volume of the unit cell is $(\det G)^{1/2}$. Esq. (1) implies that

$$G = X^T\, G'\, X \tag{9}$$

and for given G and G′ there may not be rational solutions X for this equation. T denotes the transposed matrix. The reciprocal lattice of L, for example, has a basis $(\mathbf{e}^*)$ given by

$$[\mathbf{e}^*] = [\mathbf{e}]\, G^{-1} \tag{10}$$

2.2 — *Formulation of the Problem*

If the orientation matrix X is not rational, we write X in the form

$$X = D\, C \tag{11}$$

where C is a rational matrix defining a c. s. l. relation between lattice L and another lattice L'_d with basis

$$[\mathbf{e}'_d] = [\mathbf{e}']\, D \quad : \tag{12}$$

L'_d deviates slightly from lattice L' and is in a c. s. l. relation with lattice L :

$$[\mathbf{e}] = [\mathbf{e}'_d]\, C \quad . \tag{13}$$

More generally, we could write X in the form $X = D' C D^{-1}$, by considering two auxiliary lattices $[\mathbf{e}_d] = [\mathbf{e}]\, D$ and $[\mathbf{e}'_d] = [\mathbf{e}']\, D'$, associated respectively with L and L', in a c. s. l. relation: $[\mathbf{e}_d] = [\mathbf{e}'_d]\, C$. This is the type of decomposition used by Christian [20]. However, for a given X and a chosen C , it is always possible to write X in the simpler form eq. (11), which we shall use in the following analysis. There are, of course, infinite choices for the matrices C and D satisfying eq. (11). As a general rule, the physically best choice should be the one for which the degrees of coincidence (Σ and Σ') defined by C are small and the deviation defined by D is small (that is, $D \simeq I$, I being the identity matrix). For a given choice of C , we find a basis $(\mathbf{b}_0) = (\mathbf{b}_{01}, \mathbf{b}_{02}, \mathbf{b}_{03})$ of the DSC lattice in the way described above (eqs. (7) and (8)) and choose three arbitrary non-coplanar vectors $(\mathbf{b}) = (\mathbf{b}_1, \mathbf{b}_2, \mathbf{b}_3)$ of this lattice. We shall find the dislocation content of an interface with unit normal $\mathbf{n}$, assuming that the dislocations have Burgers vectors $\mathbf{b}_1$, $\mathbf{b}_2$, $\mathbf{b}_3$.

We take lattice L as fixed and consider a reference state with lattices L and L'_d in the c. s. l. orientation, C . As in the derivation of Frank's formula [11] we take an arbitrary vector $\mathbf{v}$ in the plane of the interface between L and L'_d. This plane has a definite orientation in lattice L , so that no ambiguity occurs. When L'_d is transformed into L' by means of the operator D , the vector $\mathbf{v}$ is transformed into $D^{-1}\mathbf{v}$ (eq. 4). We now state that the difference between the two vectors $\mathbf{v}$ and $D^{-1}\mathbf{v}$ is the sum, $\mathbf{B}$, of the Burgers vectors of all dislocations cut by $\mathbf{v}$:

$$\mathbf{B} = (I - D^{-1})\, \mathbf{v} \quad . \tag{14}$$

This is the basic equation of the formal theories of surface and interface dislocations [20, 23]. In the following we shall find the solution of this equation in order to determine the detailed dislocation content of the interface. The method of solution is similar to that of Knowles [21] but a correction is made to an error in his derivation, which is in fact valid only when the reference lattice is cubic (see below).

The interface will in general contain several families of dislocations, each family having the same Burgers vector. An argument similar to the one used by Read [11] would show that the dislocations of a given Burgers vector are parallel and equally spaced. Adopting the procedure of Sargent and Purdy [18] we therefore define vectors $\mathbf{N}_i$, perpendicular to the family of dislocations $\mathbf{b}_i$ and such that the spacing d_i between the dislocations in the family is

$$d_i = |\mathbf{N}_i|^{-1} . \tag{15}$$

The number of dislocations $\mathbf{b}_i$ cut by $\mathbf{v}$ is $\mathbf{v} \cdot \mathbf{N}_i$ and their contribution to the total Burgers vector $\mathbf{B}$ is $(\mathbf{v} \cdot \mathbf{N}_i)\, \mathbf{b}_i$. Therefore

$$(I - D^{-1})\, \mathbf{v} = \sum_i (\mathbf{v} \cdot \mathbf{N}_i)\, \mathbf{b}_i \quad . \tag{16}$$

This relation holds for any $\mathbf{v}$ such that

$$\mathbf{v} \cdot \mathbf{n} = 0 \quad . \tag{17}$$

2.3 — *Determination of the Dislocation Content*

To solve eqs. (16) and (17) we introduce the reciprocal vectors $\mathbf{b}_i^*$ of the $\mathbf{b}_i$, defined by (cf. eq. 10)

$$[\mathbf{b}^*] = [\mathbf{b}]\, G_b^{-1} \tag{18}$$

where G_b is the metric matrix of the $\mathbf{b}_i$. The vectors $\mathbf{b}_i^*$ belong to the reciprocal lattice of the $(\mathbf{b}_o)$, with basis $(\mathbf{b}_o^*)$ given by (cf. eqs. (9) and (10))

$$[\mathbf{b}_o^*] = [\mathbf{b}_o]\, M\, G^{-1}\, M^T \quad . \tag{19}$$

The lattice $(\mathbf{b}_o^*)$ is the c. s. l. of the reciprocal lattices of $(\mathbf{e})$ and $(\mathbf{e}')$ (e.g. [25]). Taking the scalar product of eq. (16) by $\mathbf{b}_i^*$, we obtain

$$\mathbf{b}_i^* \cdot (I - D^{-1})\, \mathbf{v} = \mathbf{v} \cdot \mathbf{N}_i \quad . \tag{20}$$

Next we introduce the adjoint operator of $(I - D^{-1})$ which is represented in the basis $(\mathbf{e})$ by the matrix

$$Q = G^{-1} \, (I - D^{-1})^{T} \, G \quad . \tag{21}$$

This allows us to write eq. (20) in the form

$$(\mathbf{N}_i - Q\,\mathbf{b}_i^*) \cdot \mathbf{v} = 0 \quad . \tag{22}$$

The vector in brackets in then parallel to $\mathbf{n}$, and since $\mathbf{N}_i$ is perpendicular to $\mathbf{n}$, we finally obtain

$$\mathbf{N}_i = Q\,\mathbf{b}_i^* - (Q\,\mathbf{b}_i^* \cdot \mathbf{n})\,\mathbf{n} \tag{23}$$

with Q defined by eq. (21). The vector $\mathbf{N}_i$ is the projection of $Q\,\mathbf{b}_i^*$ in the plane of the boundary. In matrix notation, eq. (23) is written as

$$\{\mathbf{N}_i\} = Q\{\mathbf{b}_i^*\} - \{\mathbf{n}\}^{T} \, (GQ\{\mathbf{b}_i^*\})\{\mathbf{n}\} \tag{24}$$

where $\{\ \}$ denotes a column matrix. This derivation leads to the same equations obtained by Knowles [21] except for the presence of the metric matrix G in the definition of Q. In fact, Knowles' result is only valid when $G = I$. This becomes apparent from inspection of eq. (17) in his paper.

The general procedure to obtain the orientation and spacing of misfit dislocations can be summarized in the following steps:

1 — Decomposition of the orientation matrix X (eq. 11).

2 — Determination of the DSC lattice associated with C (eq. 8): vector basis $(\mathbf{b}_o)$.

3 — Determination of the matrix Q (eq. 21) and vectors $Q\,\mathbf{b}_o^*$

$$[\mathbf{b}_o^*]\,Q = [\mathbf{b}_o]\,M\,G^{-1}\,M^{T}\,Q = [\mathbf{e}]\,G^{-1}\,M^{T}\,Q \quad . \tag{25}$$

To each Burgers vector $\mathbf{b}$ we may therefore associate a vector $Q\,\mathbf{b}^*$.

4 — Choice of three non-coplanar Burgers vectors $\mathbf{b}$ in the lattice $(\mathbf{b}_o)$.

5 — The direction and spacing of the dislocations with **b** is determined from the projection of the corresponding Q **b*** in the plane of the interface: the dislocations are perpendicular to the projected vector and their reciprocal spacing is the modulus of that vector (Fig. 1).

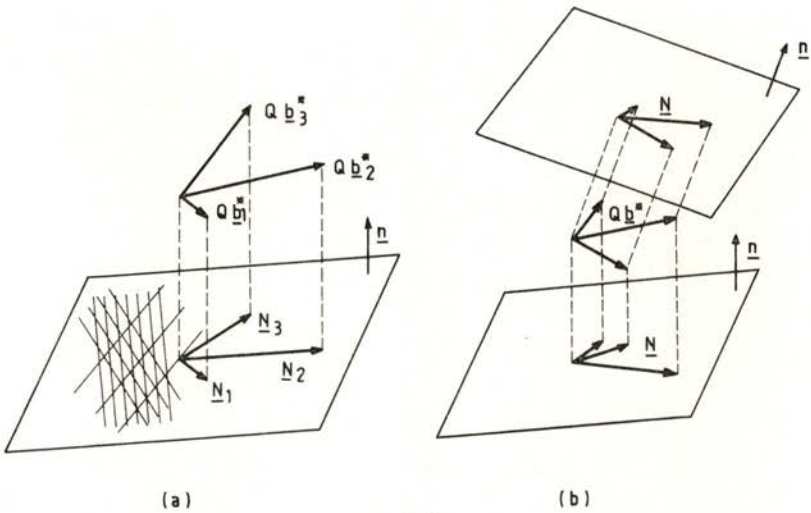

Fig. 1 — *a*) The directions and spacing of the misfit dislocations is determined by the projection $\mathbf{N}_i$ of the three vectors $Q\mathbf{b}_i^*$ in the plane of the interface. *b*) Effect of orientation of the interface on the distribution of dislocations defined by vectors **N**.

If the rank of Q is three, the vectors Q **b*** form a 3-dimensional lattice with the basis (25). This lattice can be termed the dislocation content lattice. Three families of dislocations with any non-coplanar **b**'s can accommodate the deviation from the c. s. l., for any orientation of the interface (Fig. 1). When a particular near c. s. l. relation and a particular interface orientation are considered, it is clear that larger Burgers vectors, **b**, correspond to larger Q **b*** vectors and therefore to larger dislocation spacings. However, if the energy per unit length of the dislocations increases more than linearly with b, the energy of the interface should increase as b

increases. Small Burgers vectors are therefore preferred. This is a general tendency, but in particular cases (e.g. for particular orientations of the interface) larger Burgers vectors may be energetically favourable. Various criteria that can be used to choose the more convenient matrix D have been discussed by Knowles [19, 21]. As a guide to decide the more favourable near c. s. l. relation, that is, the one for which the interface structure has lower energy, we can use the following simple argument. From eq. (25) and the relation between metric matrices, eq. (9), it is easily concluded that the volume of the unit cell of the $Q\,\mathbf{b}^*$ vectors is $\Sigma\,|\det Q|\,/\,\Omega$, where Ω is the volume of the unit cell of lattice L. This quantity is a measure of the average dislocation density at interfaces for that particular reference c. s. l. relation. Therefore, the best choice of the decomposition (eq. 11) of the orientation matrix should be the one for which $\Sigma\,|\det Q|$ has the smallest value. Broadly, low Σ values and $D \simeq I$ should be favoured. However, the energy of the interface is not a simple function of the dislocation density, so that the rule has to be regarded carefully. Finally, the above result shows that as the deviation from a given c. s. l. relation increases, or the value of Σ increases, the average dislocation spacing $(\Sigma\,|\det Q|\,/\,\Omega)^{-1/3}$ decreases; the c. s. l. model fails when $\Sigma\,|\det Q|$ is of the order of unity.

If the rank of Q is two, the vectors $Q\,\mathbf{b}^*$ are all in the same plane, but do not form a lattice except in special cases (see an example below). If there is a vector $\mathbf{b}^*$ such that $Q\,\mathbf{b}^* = 0$ (and this may be possible if the rank of Q is two), interfaces of any orientation can be described with just two families of dislocations.

Similar considerations apply when the rank of Q is one.

2.4 — *Continuity of Dislocations Lines*

It is interesting to point out that eq. (23) ensures the physically necessary continuity of the dislocation lines, of a given Burgers vector, as the plane of the interface changes (Fig. 2). This question is important in relation to interface faceting. Consider two planes with unit normals $\mathbf{n}$ and $\mathbf{n}'$. Their intersection is parallel to $\mathbf{n} \times \mathbf{n}'$. The orientation and spacing of dislocations in each plane is defined by $\mathbf{N}_i$ and $\mathbf{N}'_i$ for each Burgers vector $\mathbf{b}_i$.

It is assumed that the same Burgers vectors appear in both planes, although this is not strictly necessary. Continuity of the dislocations $\mathbf{b}_i$ implies that

$$d_i / \cos\Theta = d'_i / \cos\Theta' \tag{26}$$

where Θ and Θ' are defined in Fig. 2. Eq. (26) is equivalent to

$$|\mathbf{N}_i \cdot (\mathbf{n} \times \mathbf{n}')| = |\mathbf{N}'_i \cdot (\mathbf{n} \times \mathbf{n}')| \,. \tag{27}$$

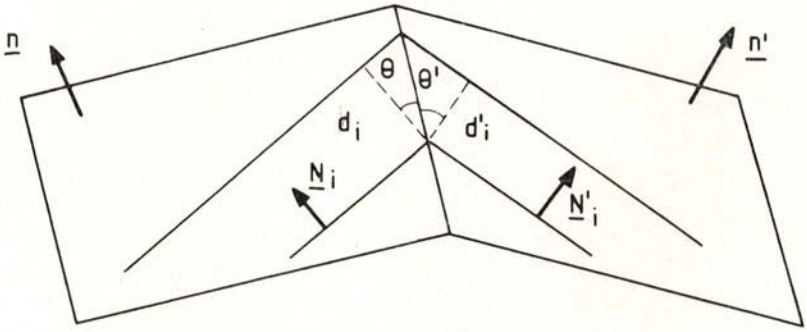

Fig. 2 — The dislocations of a given Burgers vector are continuous when the plane of the interface changes from the orientation $\mathbf{n}$ to $\mathbf{n}'$.

It is immediately seen from eq. (23), that this relation holds for any $\mathbf{n}$, $\mathbf{n}'$. The dislocations are therefore continuous, even when the plane of the interface changes abruptly.

3 — APPLICATION TO GRAIN BOUNDARIES

The orientation matrix X is in this case a rotation matrix. Then D is also a rotation matrix and the rank of Q is necessarily two. The $Q\,\mathbf{b}^*$ vectors are all in the same plane. If the rotation axis for D is defined by the unit vector $\mathbf{u}$, the plane of the $Q\,\mathbf{b}^*$ vectors is perpendicular to $\mathbf{u}$. When the rotation angle Θ in D is small, the matrix Q is equivalent to the operation defined by

$$Q = \Theta\, \mathbf{u} \times \tag{28}$$

where $\times$ denotes the cross product.

The $Q\,\mathbf{b}^*$ vectors form a lattice in the plane $\mathbf{u}$ if and only if $\mathbf{u}$ is parallel to a lattice direction and perpendicular to a lattice plane of the two lattices in the c. s. l. orientation. This is immediately seen when Q has the form (28), since in this case the operation Q is directly related to the projection on the plane $\mathbf{u}$. Those conditions are in general only met in cubic crystals. More generally, the $Q\,\mathbf{b}^*$ vectors may have their extremities on a family of parallel equidistant straight lines or they may fill the whole plane when placed at a common origin.

When $\mathbf{u}$ is perpendicular to a lattice plane of the two crystal lattices in the c. s. l. orientation, there is a reciprocal $\mathbf{b}^*$ parallel to $\mathbf{u}$ and for this $Q\,\mathbf{b}^* = 0$. In this case all grain boundaries may contain just two families of dislocations with Burgers vectors in the plane $\mathbf{u}$.

As for a general crystalline interface, the actual dislocation content of a grain boundary can only be decided, among all possible choices of the reference c. s. l. and the corresponding combinations of Burgers vectors, after calculating the energy of the boundary for each set of Burgers vectors. The variation of the energy of the boundary with its orientation can then be determined, and the so called γ - plot constructed. Special orientations, possibly associated with cusps in the γ - plot, will occur when one family of dislocations is missing, relative to neighbouring orientations. The special orientations are those for which the boundary plane is normal to a $Q\,\mathbf{b}^*$ vector, which in turn implies that the deviation from the c. s. l. orientation is a pure tilt rotation.

4 — DISCUSSION

Although misfit dislocations have been observed in a variety of interfaces, it is not certain whether they are a general feature of crystalline interfaces. The formal theory outlined in this paper plausibly admits that they should occur at interfaces which deviate slightly from special or favoured orientations containing a high density of coincidence points. The misfit dislocations can be regarded as line defects in the DSC lattice but this lattice can only be defined for c. s. l. orientations. In most cases, such orientations only occur if we allow for changes in the metric of the two crystals. However, it is difficult to physically legitimate

these changes since they interfere with the stability of the crystals; the favoured interfaces are then purely conceptual.

When coincidence of lattice points does not occur, it is still possible to define a coincidence of equivalent points in the two crystal lattices [2]. These are the 0 - points and form a translation lattice — the 0 - lattice. Bolmann [2] suggested that special interfaces are those that contain a high density of 0 - points, but the physical basis for this is weak: the 0 - lattice theory is "too" geometrical.

Nevertheless, the concept of favoured or special interfaces of low energy is useful and can possibly be generalized to include all those interfaces correlated with cusps in the energy plots (or γ - plots) as a function of the orientation of the interface for any relative orientation of the two crystals. A difficulty arises in such cases, in that there is not, as there is in the case of c. s. l. interfaces, an obvious crystallographic "state" in relation to which dislocations can be defined, although they could still be regarded as line singularities in the atomic configuration at the interface.

The formal theory discussed in this paper and the equations derived allow a correct interpretation of the structure of interfaces in simples cases, but it is unlikely that their applicability is general. Besides, the theory does not identify unambiguously the Burgers vectors of the intervening dislocations. The alternative approach to the structure of interfaces is the direct calculation by computer of the atomic positions, using adequate interatomic potentials. A considerable amount of work along this line has been undertaken in recent years for grain boundaries [26, 27]. But, as expected, the approach has little predictive value and the c. s. l. theory of interfaces remains the most rational and simple (although not entirely satisfactory) framework to discuss the structure and properties of interfaces.

REFERENCES

[1] D. G. BRANDON, B. RALPH, S. RANGANATHAN and M. S. WALD, *Acta Met.* 12, 813 (1964); see also P. H. PUMPHREY, «*Grain Boundary Structure and Properties*», Chap. 5, ed. G. A. CHADWICK and D. A. SMITH, (Academic Press, 1976).

[2] W. BOLLMANN, «*Crystal Defects and Crystalline Interfaces*», (Springer--Verlag, Berlin, 1970).

[3] S. AMELINCKX, «*Dislocations and Mechanical Properties of Crystals*», (Wiley, New York, 1957).

[4] B. LOBERG and H. NORDEN, «*Grain Boundary Structure and Properties*», Chap. 1, ed. G. A. CHADWICK and D. A. SMITH, (Academic Press, 1976).

[5] L. M. CLAREBROUGH and C. T. FORWOOD, *Phys. Stat. Sol.* (a), **58**, 597 (1980).

[6] L. M. CLAREBROUGH and C. T. FORWOOD, *Phys. Stat. Sol.* (a) **59**, 263 (1980).

[7] G. H. BISHOP and B. CHALMERS, *Scripta Met*, **2**, 133 (1968).

[8] A. P. SUTTON and V. VITEK, *Scripta Met.* **14**, 129 (1980).

[9] A. P. SUTTON, R. W. BALLUFFI and V. VITEK, *Scripta Met.* **15**, 989 (1981).

[10] W. T. READ and W. SHOCKLEY, *Phys. Rev.* **78**, 275 (1950).

[11] W. T. READ, «*Dislocations in Crystals*» (McGraw Hill, 1953).

[12] S. AMELINCKX and W. DEKEYSER, *Solid State Phys.* **8**, 325 (1959).

[13] M. A. FORTES, *Philos. Mag.* **28**, 1165 (1973).

[14] P. H. PUMPHREY, *Scripta Met.* **9**, 151 (1975).

[15] J. H. VAN DER MERWE, *Proc. Phys. Soc.* **A63**, 616 (1950).

[16] G. BARO and H. GLEITER, *Acta Met.* **21**, 1405 (1973).

[17] J. M. RIGSBEE and H. I. AARONSON, *Acta Met.* **27**, 351 (1979).

[18] C. M. SARGENT and G. R. PURDY, *Philos. Mag.* **32**, 27 (1975).

[19] K. M. KNOWLES and D. A. SMITH, *Acta Cryst.* **A38**, 34 (1982).

[20] J. W. CHRISTIAN, «*The Theory of Transformation in Metals and Alloys*» (Oxford: Pergamon Press) Chap. 8, 1976.

[21] K. M. KNOWLES, *Philos. Mag.* **A46**, 951 (1982).

[22] M. A. FORTES, *Phys. Stat. Sol.* (b), **82**, 377 (1977).

[23] R. BULLOUGH and B. A. BILBY, *Proc. Phys. Soc.* **69**, 1276 (1956).

[24] H. GRIMMER, *Acta Cryst.*, **A32**, 783 (1976).

[25] M. A. FORTES, *Acta Cryst.*, **A39**, 351 (1983).

[26] L. J. HARRISON, G. A. BRUGGEMAN and C. H. BISHOP «*Grain Boundary Structure and Properties*», Chap. 2, ed. G. A. CHADWICK and D. A. SMITH (Academic Press, 1976).

[27] A. BROKMAN and R. W. BALLUFFI, *Acta Met.* **29**, 1703 (1982).